3. Area of Cut Surface & Centre of Gravity Formula

(www.omgfreestudy.com)

Sr. No.	Name of the figure	Shape	Area
1	Straight Line	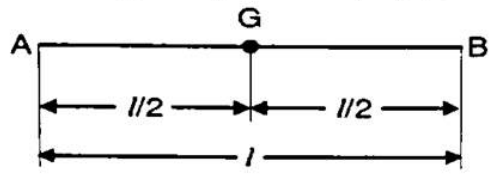	—
2	Rectangle	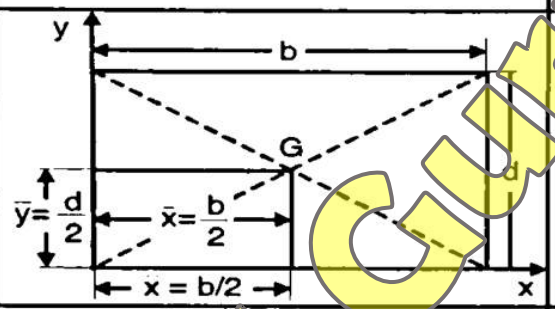	b×d
3	Square	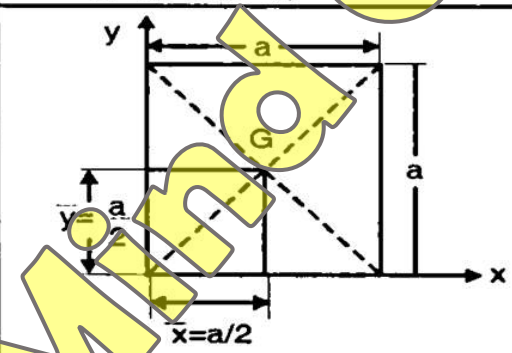	a^2
4	Triangle with different position w.r.t. x & y axis	(a) 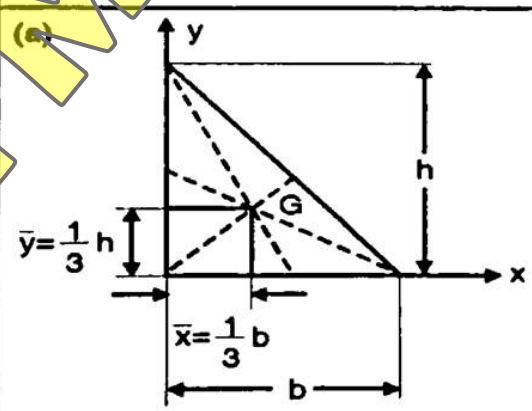	$\frac{1}{2}$ b×h
		(b) 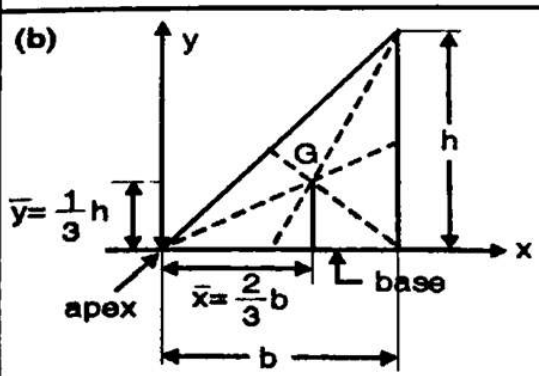	$\frac{1}{2}$ b×h

3. Area of Cut Surface & Centre of Gravity Formula

(www.omgfreestudy.com)

Sr. No.	Name of the figure	Shape	Area (A)
	Isosceles triangle	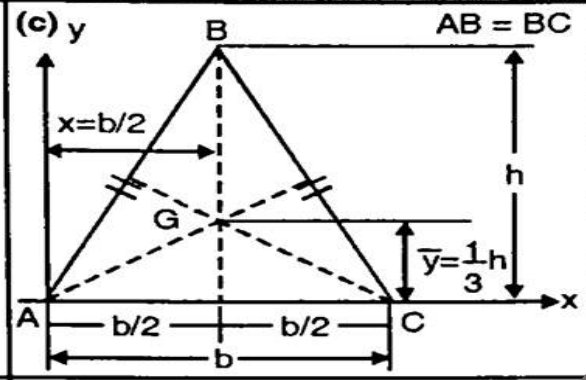	$\frac{1}{2}$ b×h
	Equilateral triangle (all sides are equal)	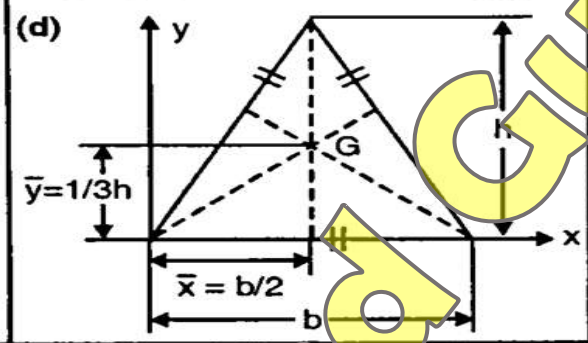	$\frac{1}{2}$ b×h
5	Circle	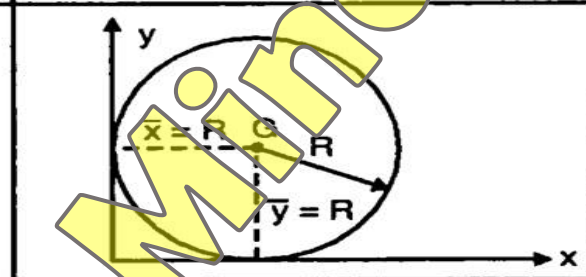	πR^2
6	Semi-circle with different position w.r.t. x & y axis	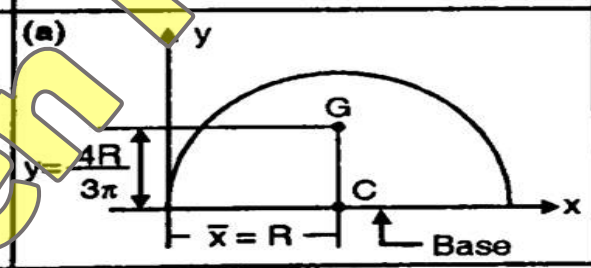	$\frac{1}{2}\pi R^2$
		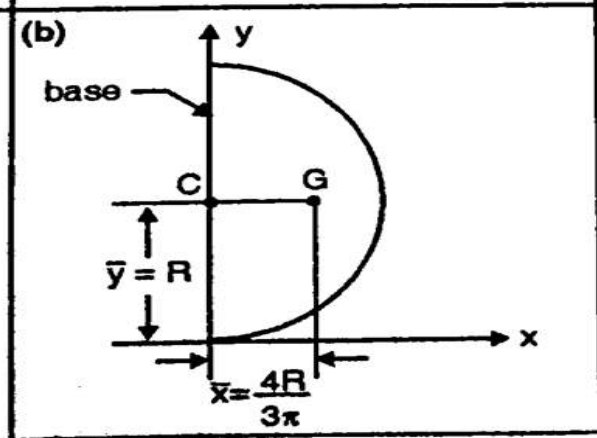	$\frac{1}{2}\pi R^2$

3. Area of Cut Surface & Centre of Gravity Formula

(www.omgfreestudy.com)

Sr. No.	Name of the figure	Shape	Area (A)
		(c) 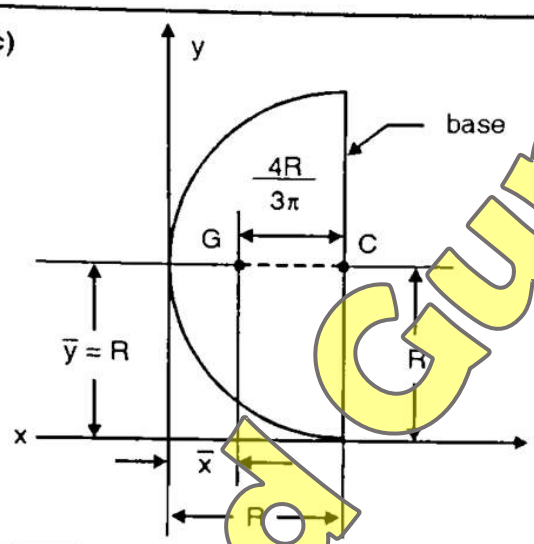	$\frac{1}{2}\pi R^2$
		(d) 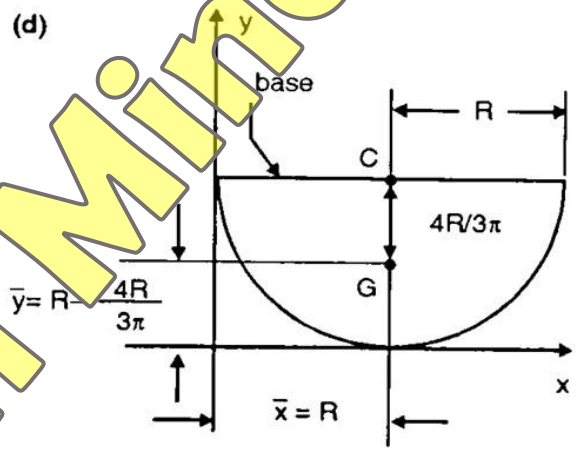	$\frac{1}{2}\pi R^2$
7	Quadrant (Quarter circle)	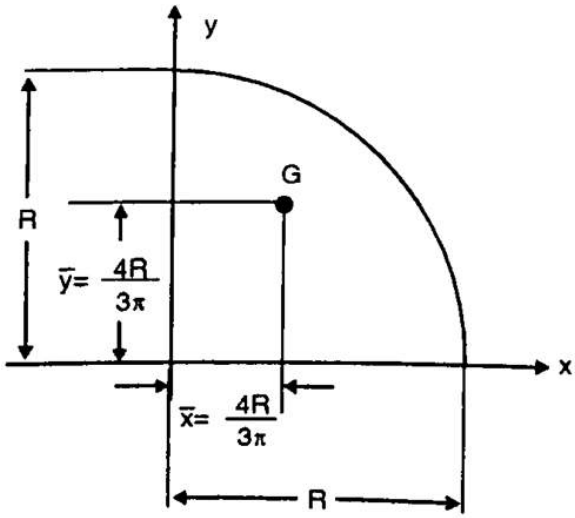	$\frac{1}{4}\pi R^2$

3. Area of Cut Surface & Centre of Gravity Formula

(www.omgfreestudy.com)

Sr. No.	Name of the solid body	Shape of the solid body	Volume	Position of C G (G)	G ($\bar{x}$, $\bar{y}$) w. r. t. x & y axis
1	Solid cylinder	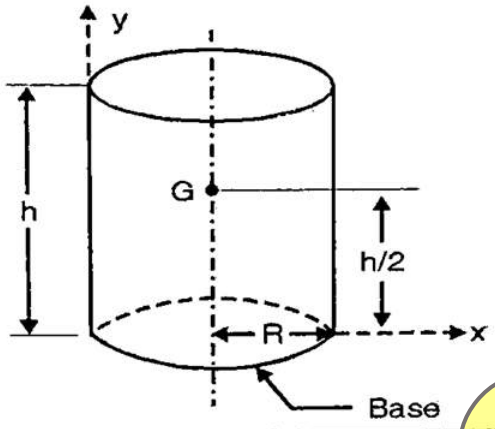	$\pi R^2 h$	At a distance of h/2 with respect of base	$\bar{x} = R$ $\bar{y} = h/2$
2	Solid cone	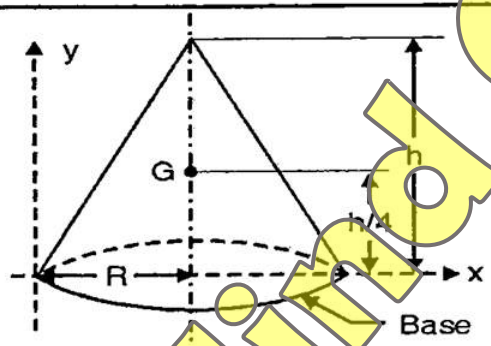	$\frac{1}{3}\pi R^2 h$	At a distance of h/4 with respect of base	$\bar{x} = R$ $\bar{y} = \frac{h}{4}$
3	Solid sphere	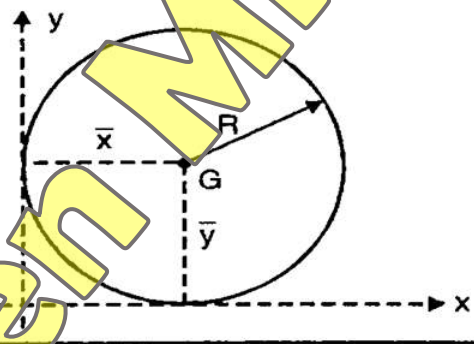	$\frac{4}{3}\pi R^3$	At the centre of the sphere	$\bar{x} = R$ $\bar{y} = R$
4	Solid hemi-sphere	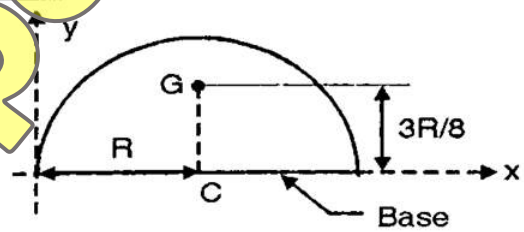	$\frac{2}{3}\pi R^3$	At a distance of 3R/8 with respect to base	$\bar{x} = R$ $\bar{y} = 3R/8$
5	* Hemi-sphere with different positions Position (a)	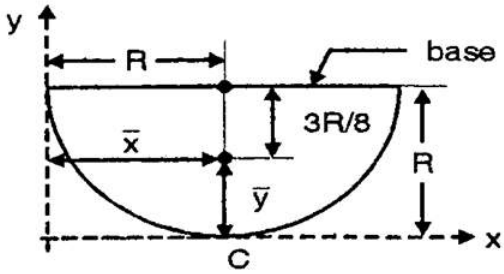	$\frac{2}{3}\pi R^3$	At a distance of 3R/8 with respect to base	$\bar{x} = R$ $\bar{y} = R - \frac{3R}{8}$

3. Area of Cut Surface & Centre of Gravity Formula

(www.omgfreestudy.com)

Sr. No.	Name of the solid body	Shape of the solid body	Volume	Position of C G (G)	G ($\bar{x}$, $\bar{y}$) w. r. t. x & y axis
	Position (b)	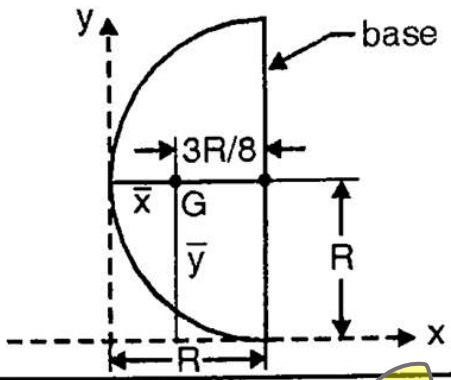	$\frac{2}{3}\pi R^3$	At a distance of 3R/8 with respect to base	$\bar{x} = R - \frac{3R}{8}$ $\bar{y} = R$
	Position (c)	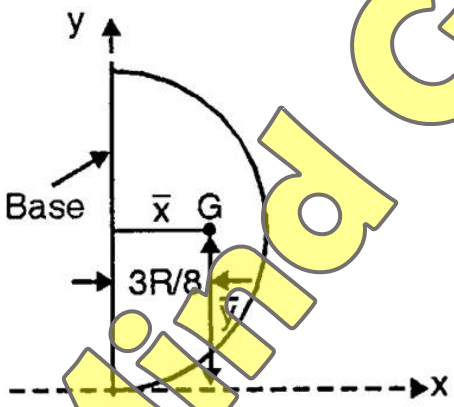	$\frac{2}{3}\pi R^3$	At a distance of 3R/8 with respect to base	$\bar{x} = \frac{3R}{8}$ $\bar{y} = R$
6	Solid rectangular block	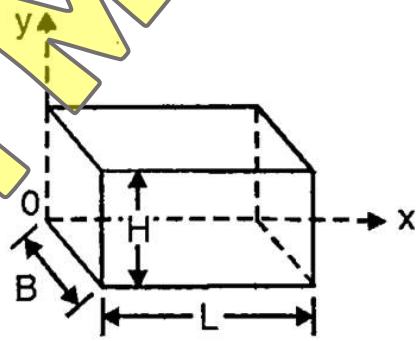	L×B×H	Point of intersection of diagonals	$\bar{x} = \frac{L}{2}$ $\bar{y} = \frac{H}{2}$
7	Solid cube	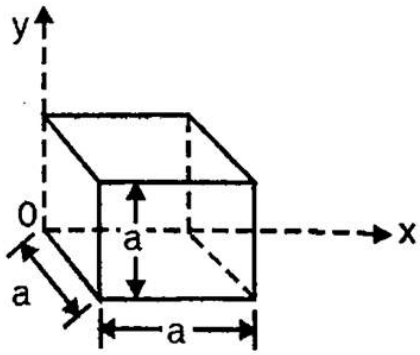	a^3	Point of intersection of diagonals	$\bar{x} = \frac{a}{2}$ $\bar{y} = \frac{a}{2}$